DETAILS NEW

EC frameless DT 38 M, Ø42 mm, brushless, 240W | Dynamic Torque

Part number 800948

PRICE SCALES	Quantity	Price per unit
Prices excluding VAT and shipping costs	1-4	**€271.78**
	5-19	**€232.10**
	20-49	**€209.57**
	from 50	**On request**

Start combination

Order quantity 1

Add to cart

Specifications | Description | Downloads

Specifications

TECHNICAL ILLUSTRATIONS

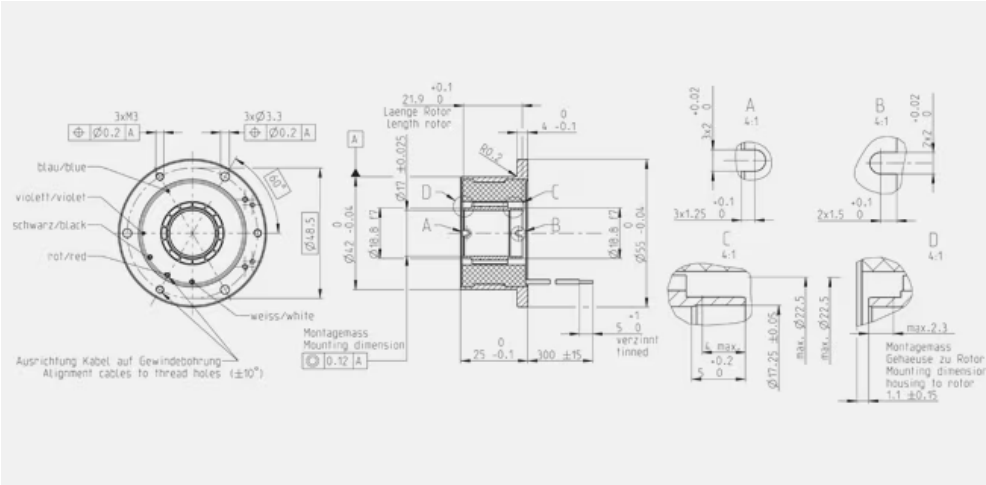

Dimension drawing

Information: Drawings are not to scale.

VALUES AT NOMINAL VOLTAGE	
Nominal voltage	24 V
No load speed	6290 rpm
No load current	147 mA
Nominal speed	5110 rpm
Nominal torque (max. continuous torque)	186 mNm
Nominal current (max. continuous current)	4.69 A

Stall torque	1150 mNm
Stall current	63.8 A
Max. efficiency	91 %
CHARACTERISTICS	
Terminal resistance	0.376 Ω
Terminal inductance	0.312 mH
Torque constant	36.2 mNm/A
Speed constant	264 rpm/V
Speed / torque gradient	2.74 rpm/mNm
Mechanical time constant	0.583 ms
Rotor inertia	20.3 gcm²
THERMAL DATA	
Thermal resistance housing-ambient	6.87 K/W
Thermal resistance winding-housing	0.33 K/W
Thermal time constant winding	3.38 s
Thermal time constant motor	574 s
Ambient temperature	-40...+100 °C
Max. winding temperature	+155 °C
MECHANICAL DATA	
Max. speed	15000 rpm
OTHER SPECIFICATIONS	
Number of pole pairs	7
Number of phases	3
PRODUCT	
Weight	170 g

OPERATING RANGE

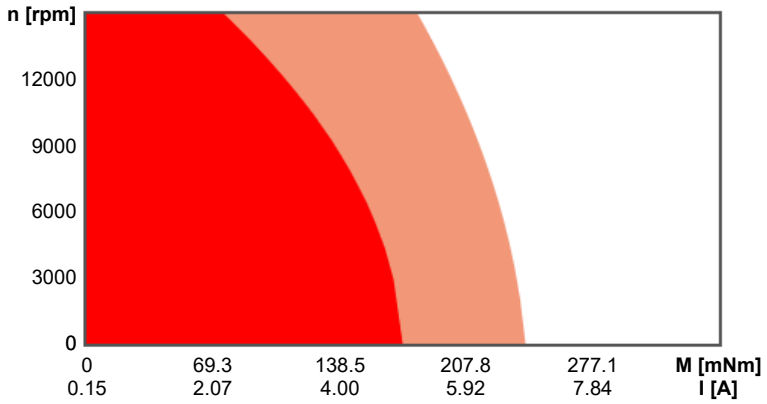

Continuous operation range

Short term operation range

Description

The EC frameless DT motors are BLDC motor kits with internal-rotor technology. The rotor and stator are delivered separately, without bearings or motor shaft, and are connected only during assembly. The flat design, the high torques, and a lot of space for cable glands allow a high level of integration into your application.

Downloads

CAD-FILES (STEP)

CAD model (STEP) (ZIP 852 KB)	Version 2024

MANUALS

GERMAN

Montageanleitung (deutsch, PDF 9 MB)	Version 2025

ENGLISH

Installation Manual (english, PDF 9 MB)	Version 2025

CATALOG PAGE

Catalog page (english, PDF 66 KB)	Version 2025

OTHER

EC frameless DT brochure (english, PDF 2 MB)	Version 2025

Videos

Add to wish list | Make a request | Send to a colleague | Print specifications

Selecting, combining, and configuring drive systems

Short delivery times for custom drives

Extensive product specifications and software

Product support

+41 (41) 666 18 00

Shopping made easy

Product selection

Shipping

Delivery

Payment

Payment options

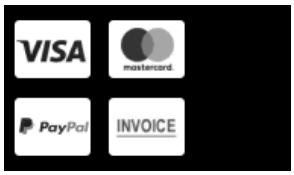

Knowledge

Find out more about the interaction of motor, gearhead, sensors, and controller.

Knowledge & e-learning